AccessFixtures
High-Performance Lighting Solutions

STAD LED Sports Lights

High-Performance Sports Lighting

STAD LED sports lights are engineered for new sports facilities and as a seamless one-to-one upgrade from 1000W and 1500W metal halide systems. They match and exceed existing light levels while reducing energy use and maintenance — at 88,238 to 143,627 delivered lumens, up to 171 lm/W, in four beam angles with two mounting options.

AccessFixtures.com **800-468-9925** **Sales@AccessFixtures.com**

One Fixture Out, One Fixture In

STAD is engineered for one-to-one replacement of metal halide sports lights. The optics match metal halide distributions, so the array that lit the venue before is the array that lights it after — at a higher level, on less power, with no lamp or ballast cycle to fund.

REPLACING 1000W METAL HALIDE

STAD 570 · STAD 650

563.9 W delivering 88,238 lm, or 651.8 W delivering 100,120 lm, in an 18" head. Both replace a 1000W metal halide fixture on a one-for-one basis.

REPLACING 1500W METAL HALIDE

STAD 850

837.5 W delivering 143,627 lm at 171 lm/W, in a 22" head. The highest output and highest efficacy in the line.

WHAT THE SWAP LOOKS LIKE ON A REAL FIELD

The 360 ft × 160 ft football design on page 13 uses 48 STAD 850 fixtures on the venue's four 70 ft poles. As metal halide, those 48 positions carried 1500W lamps.

72,000 W
48 × 1500W metal halide lamp load, before ballast losses

40,200 W
48 × STAD 850 at 837.5 W, as modeled in the study

44% less
Fixture watts, before ballast losses and before dimming

Match, then exceed
The photometric model proves the new level against the old one before anything ships.

Keep the structures
U-Bracket and Bolt Mount cover steel poles, wood poles, and existing crossarms.

No relamping
L70 at 50,000 hours retires the lift rental from the maintenance budget.

Precision, Efficiency, Durability

Three engineering decisions define the line. Each one is what makes a one-to-one metal halide replacement work rather than merely fit.

01 · PRECISION OPTICS

Four beam angles. No wasted light.

STAD offers 20°, 30°, 40°, and 50° distributions that match metal halide sports optics. Narrow beams carry the far side of a venue; wide beams fill the area near the pole. Mixed on the same pole and aimed to a model, they deliver uniform illumination with reduced glare and light that lands on the surface of play instead of the treeline.

The five studies in this guide use every optic in the line — 20° at 70 ft on a football field, 50° at 39 ft on pickleball courts, 40° and 50° over skatepark bowls.

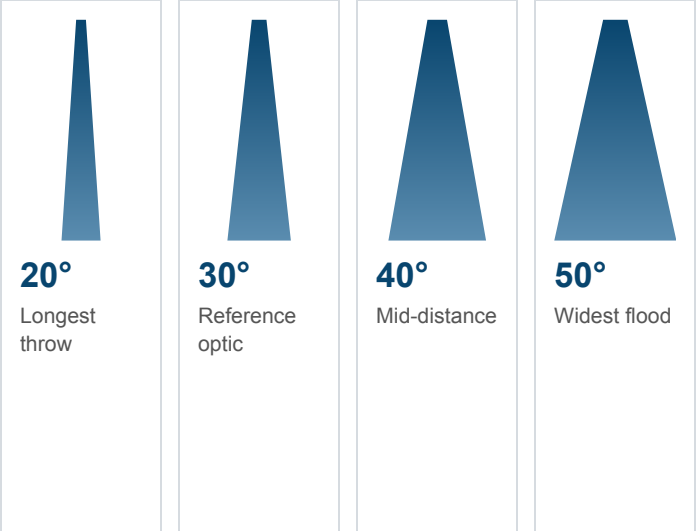

02 · EXTREME EFFICIENCY

Up to 143,627 lm at 171 lm/W.

Delivered lumens and efficacy are per model, and all three are DLC Premium listed. The STAD 850 delivers 143,627 lm at 171 lm/W — output that lets a full field be covered from four pole locations instead of eight.

MODEL	WATTS	LUMENS	LM/W
STAD 570	563.9	88,238	156
STAD 650	651.8	100,120	154
STAD 850	837.5	143,627	171

03 · LASTING DURABILITY

Built for harsh winter conditions.

A rugged die-cast aluminum head and driver box on a steel support frame, open cooling fins that move heat off the LED modules and the driver, an IP65 wet-location seal, and a −40°C to +40°C service range with ambient tolerance to 50°C.

STADs operating through snowfall at an installed range.

One Fixture Family, Every Sport That Plays After Dark

The model sets the output tier, the optic sets the throw, and the aiming plan sets where the light lands. That combination covers courts a hundred feet wide and fields six hundred feet long — and the designs behind these applications are in this guide, not asserted.

Football & Soccer

Long throw across a wide surface from sideline poles only. 48 STAD 850s on four 70 ft poles held 50 fc average. **Page 13.**

Tennis

Courts sit close together and light must stop at the fence. 12 STAD 570s covered four courts at 35–38 fc. **Page 14.**

Pickleball

Dense court blocks, few poles. Eight STAD 850s on 50° optics lit six courts at 46–48 fc. **Page 14.**

Baseball & Softball

Two zones at two levels, with fly balls demanding glare control. 24 STAD 570s across a mixed-optic array. **Page 15.**

Skateparks

Bowls and transitions are vertical surfaces, not a flat plane. Eight STAD 570s across ten calculation surfaces. **Page 15.**

Lacrosse & Multi-Use

One array, several sets of markings. A single aiming plan holds the level across every geometry the venue schedules.

Basketball & Volleyball

Compact outdoor courts where spill control matters more than raw output. Wide optics from short setbacks.

Track & Practice

Continuous 0-10V dimming to 10% serves competition level, practice level, and a low setting for grounds security.

Ranges & Clay Sports

Forward-throw optics track the target's flight path rather than lighting the ground beneath it. **Page 16.**

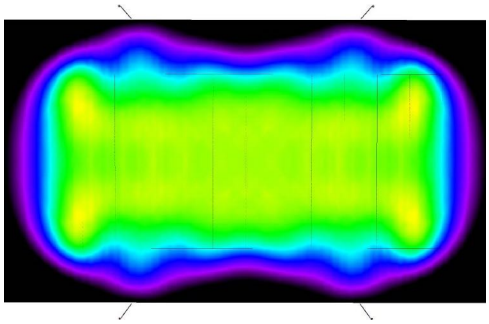

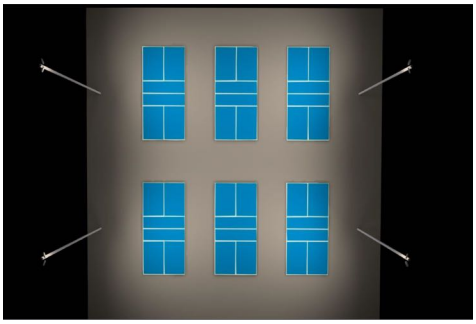

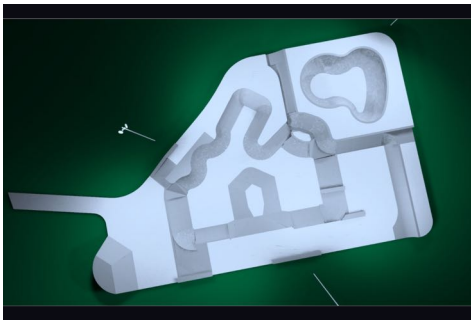

Target light level and uniformity are set by the governing standard for the sport and the level of play, not by the fixture. An Access Fixtures lighting engineer establishes the target for your venue and cites the standard in your photometric study.

Three Models, Two Bodies, One Specification Language

STAD 570 and STAD 650 share one body and look identical. STAD 850 is the larger body. Figures below are DLC-reported values from each model's Qualified Products List entry, with production-confirmed voltage and surge.

STAD 570

Replaces 1000W metal halide
88,238 lm · 156 lm/W
18" (457 mm) head
DLC SSL V5.1 Premium
200–528 VAC
Courts, diamonds, skateparks

STAD 650

Replaces 1000W metal halide
100,120 lm · 154 lm/W
18" (457 mm) head
DLC SSL V6.0 Premium
120–277 or 277–480 VAC
More output, same body

STAD 850

Replaces 1500W metal halide
143,627 lm · 171 lm/W
22" (558.8 mm) head
DLC SSL V5.1 Premium
200–528 VAC
Full fields, long throws

SPECIFICATION	STAD 570	STAD 650	STAD 850
Actual input watts	563.9 W	651.8 W	837.5 W
Delivered lumens	88,238 lm	100,120 lm	143,627 lm
Efficacy	156 lm/W	154 lm/W	171 lm/W
Replaces	1000W MH	1000W MH	1500W MH
Dimensions (H × Ø × D)	33.5 × 18 × 26.3"	33.5 × 18 × 26.3"	35.2 × 22 × 26.3"
Voltage	200–528 VAC	120–277 / 277–480 VAC	200–528 VAC
Surge protection	6 kV	6 kV	6 kV
Power factor / THD	0.996 / 4.2%	0.999 / 2.8%	0.996 / 4.2%
Optics	20° 30° 40° 50°	20° 30° 40° 50°	20° 30° 40° 50°
Body	LED-2818	LED-2808F	LED-2822
SKU	AF55XL2818N30575KUVG	AF55XL2808N30655KUVG	AF55XL2822N30855KUVG

Shared across the line: 5000K, CRI 70+, IP65 wet-location listed, IK08, −40°C to +40°C, L70 at 50,000 hours, 0-10V continuous dimming to 10%, gray UV-stabilized powder-coat, polycarbonate lens, U-Bracket or Bolt Mount, UL/cUL/RoHS, 5-year warranty. Delivered lumens and efficacy are DLC-reported LM-79 representative-fixture values based on the 30° optic; production units may vary up to ±10%.

Two Bodies, Drawn to Scale

Schematic outlines of the overall envelope, drawn to the same scale so the two bodies can be compared directly. Verify effective projected area against the pole's rated wind loading before release.

STAD 570 & STAD 650

BODY · 18" HEAD

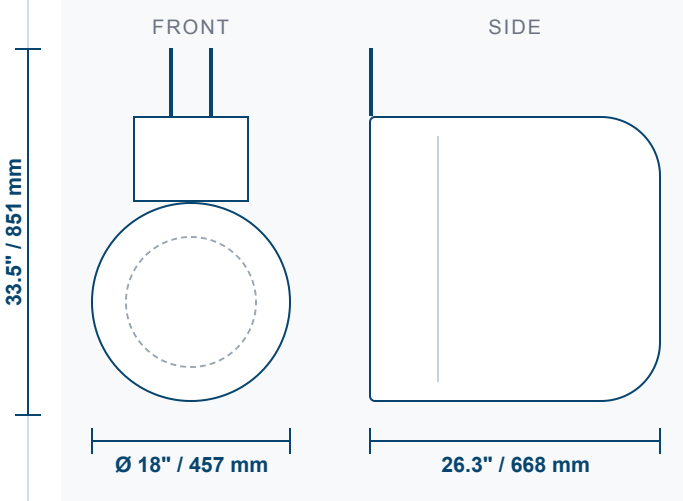

563.9 W and 651.8 W. Identical envelope, identical mounting, identical pole loading — the 650 adds 13% more delivered lumens with no dimensional change.

STAD 850

BODY · 22" HEAD

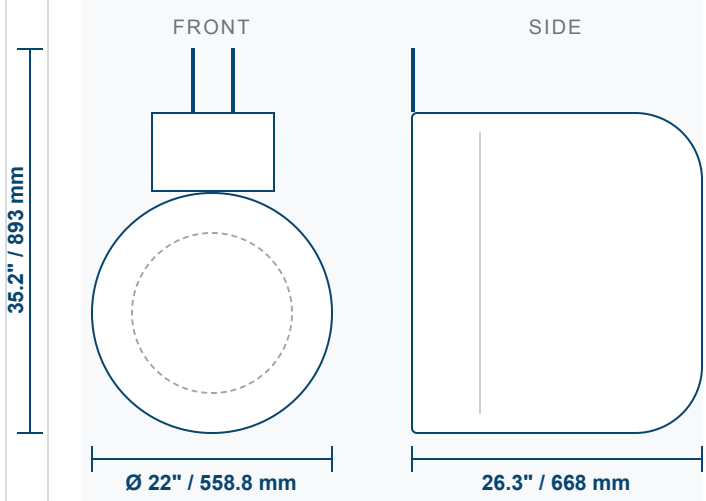

837.5 W. A 22" head and 1.7" more overall height buy 63% more delivered lumens per fixture than the 570 — the trade that reduces pole count on large fields.

MODEL	OVERALL HEIGHT	HEAD DIAMETER	DEPTH	MOUNTING
STAD 570	33.5" (851 mm)	18" (457 mm)	26.3" (668 mm)	U-Bracket or Bolt Mount
STAD 650	33.5" (851 mm)	18" (457 mm)	26.3" (668 mm)	U-Bracket or Bolt Mount
STAD 850	35.2" (893 mm)	22" (558.8 mm)	26.3" (668 mm)	U-Bracket or Bolt Mount · 20 ft cord, 5/8" bolt

Drawings are schematic outlines of the overall envelope for specification and clearance checks, not fabrication drawings. Dimensions are the published Access Fixtures figures for each body. EPA and weight are confirmed by a lighting specialist against the pole and bracket before an order is released.

STAD 570

AF55XL2818N30575KUVG

88,238 delivered lumens at 156 lm/W from 563.9 W, in the compact 18" body — a one-for-one replacement for 1000W metal halide. It is the fixture behind three of the five designs in this guide: four tennis courts, a baseball diamond, and a skatepark.

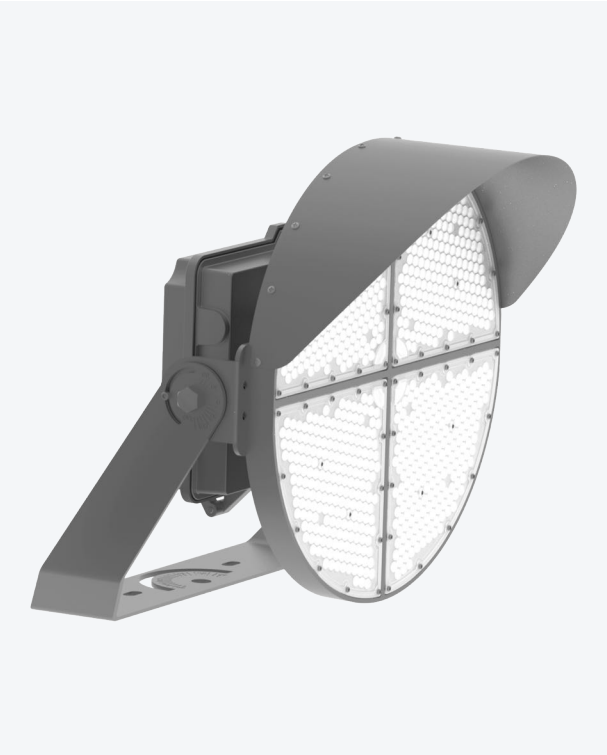

Input watts	**563.9 W (nominal 570W)**
Delivered lumens	**88,238 lm**
Efficacy	**156 lm/W**
CCT / CRI	**5000K · CRI 70+**
Voltage	**200–528 VAC**
Surge protection	**6 kV**
Power factor / THD	**0.996 / 4.2%**
Optics	**20°, 30°, 40°, 50°**
Dimensions (H × Ø × D)	**33.5 × 18 × 26.3"**
BUG rating	**B5 U3 G3**
Listings	**UL, cUL wet location · DLC SSL V5.1 Premium · RoHS**
Ingress / impact	**IP65 · IK08**
Rated life / warranty	**L70 at 50,000 hours · 5-year**

Proven across three venue types

Tennis courts at 35–38 fc, a baseball infield at 32.8 fc, and a skatepark's ten bowl surfaces — all from the same fixture.

Compact envelope

The 18" head keeps effective projected area down where pole capacity is the binding constraint.

Wide input range

200–528 VAC covers 208, 240, 277, 347, and 480 V services without a driver change.

STAD 650

AF55XL2808N30655KUVG

100,120 delivered lumens at 154 lm/W in the same 18" body as the 570 — 13% more light with no change to mounting or pole loading. It is also the only STAD carrying the newer DLC SSL V6.0 Premium listing, so it clears the current technical requirements version for utility rebate programs.

Input watts	**651.8 W (nominal 650W)**
Delivered lumens	**100,120 lm (tested 100,319 lm)**
Efficacy	**154 lm/W**
CCT / CRI	**5000K · CRI 70+**
Voltage	**120–277 or 277–480 VAC (dual driver)**
Surge protection	**6 kV**
Power factor / THD	**0.999 / 2.8%**
Optics	**20°, 30°, 40°, 50°**
Dimensions (H × Ø × D)	**33.5 × 18 × 26.3"**
Dimming / controls	**0-10V continuous to 10% · photocell option**
Listings	**UL, cUL wet location · DLC SSL V6.0 Premium · RoHS**
Ingress / impact	**IP65 · IK08**
Rated life / warranty	**L70 at 50,000 hours · 5-year**

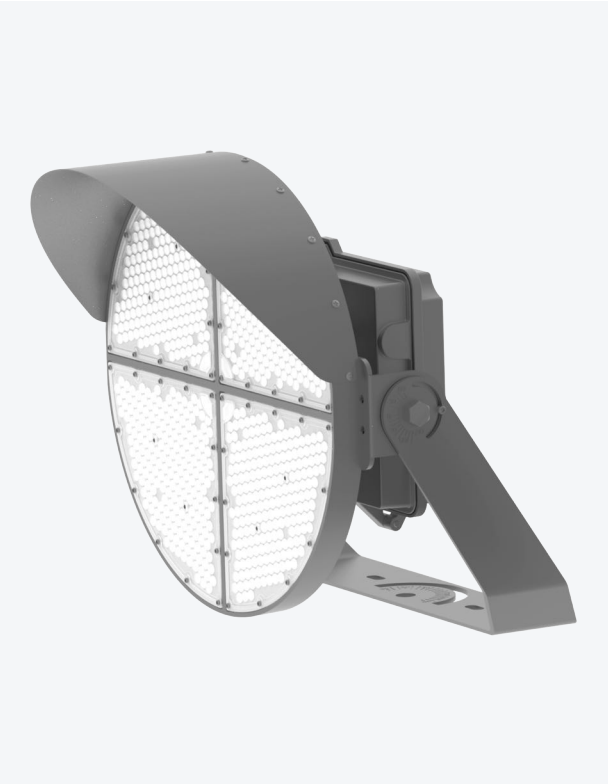

Current DLC version

SSL V6.0 Premium, listed February 2026 — the only STAD qualified to the newer requirements.

Output without size

13% more lumens than the 570 with identical dimensions, mounting, and pole loading.

Dual driver

120–277 or 277–480 VAC — the only STAD that reaches 120 V service.

Confirm before quoting: BUG rating and EPA for the 650 are pending assignment. It shares the 570 body, so both are expected to match the 570's B5 U3 G3 — a lighting specialist confirms the published figure before an order is released.

STAD 850

AF55XL2822N30855KUVG

The highest output and highest efficacy in the line: 143,627 delivered lumens at 171 lm/W from 837.5 W, in the larger 22" body. A one-for-one replacement for 1500W metal halide, and the model that lit a 360 ft × 160 ft football field to 50 fc from four poles.

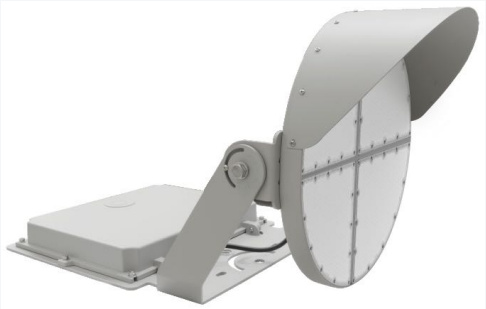

Input watts	**837.5 W (nominal 850W)**
Delivered lumens	**143,627 lm**
Efficacy	**171 lm/W**
CCT / CRI	**5000K · CRI 70+**
Voltage	**200–528 VAC**
Surge protection	**6 kV**
Power factor / THD	**0.996 / 4.2%**
Optics	**20°, 30°, 40°, 50°**
Dimensions (H × Ø × D)	**35.2 × 22 × 26.3"**
BUG rating	**B5 U4 G3**
Standard hardware	**20 ft cord · 5/8" bolt**
Listings	**UL, cUL wet location · DLC SSL V5.1 Premium · RoHS**
Rated life / warranty	**L70 at 50,000 hours · 5-year**

Highest efficacy

171 lm/W — the most delivered light per watt in the STAD line.

Fewer poles

63% more lumens per fixture than the 570 concentrates the array on fewer structures.

Aiming scale

The bracket carries a marked scale — set the tilt to the photometric design and lock it.

Rugged Enough for Harsh Winter Conditions

Three construction decisions carry the STAD through heat, cold, and vibration: a die-cast aluminum head and driver box on a steel support frame, an open heat-sink architecture that moves heat off the driver, and a UV-stabilized powder-coat finish.

Die-cast body

Die-cast aluminum head and driver box on a steel support frame — no seams to work loose under vibration, and a polycarbonate lens rated IK08.

Thermal fins

Open cooling fins pull heat off the LED modules and the driver, holding output at ambient temperatures to 50°C.

Sealed and rated

IP65 wet-location listed and built for a −40°C to +40°C service range — snow load, salt air, and freeze-thaw cycling.

DUAL MOUNTING OPTIONS

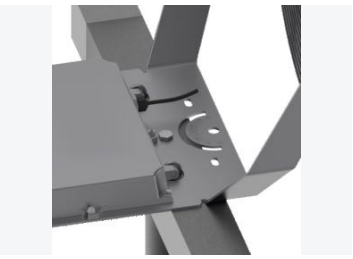

U-Bracket
An aiming scale on the bracket — set the tilt to the modeled angle and lock it. Suits multi-fixture crossarms on steel or wood poles.

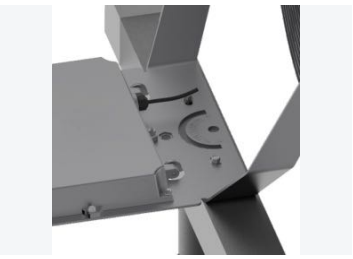

Bolt Mount
A fixed bolt-down mount for a permanent, vibration-resistant install. The 850 ships with a 20 ft cord and a 5/8" bolt.

> Two mounting options are what make the one-to-one upgrade work in the field: whatever the metal halide fixture was hanging on, a STAD can take its place on the same structure.

Dimming is how a single array supports several levels of play. The same fixtures run at competition level, drop to practice level, and sit at a low setting for grounds security — each step cutting connected load below the figures published in this guide.

CONTROLS

Dimming	**0-10V analog, continuous to 10% (all models)**
STAD 570	**Bluetooth; photocell and occupancy sensor options**
STAD 650	**Photocell option**
STAD 850	**Bluetooth**
Finish	**Gray, UV-stabilized powder-coat (only finish offered)**

Where a venue sits next to homes, the aiming plan and the optic mix — not a shield alone — are what hold light on the surface of play. STAD 570 is rated B5 U3 G3 and STAD 850 B5 U4 G3; the study for your venue shows the calculated spill so the design can be reviewed against your local ordinance before it is bid.

The Study Decides Which Optics You Buy

Every STAD is available in 20°, 30°, 40°, and 50° distributions, and most designs mix them. The mix is never assumed: change the pole height or the setback and it changes with it. Below is the optic mix each of the five designs in this guide actually landed on.

DESIGN	MOUNTING HEIGHT	OPTIC MIX	WHY THAT MIX
Football field 360 × 160 ft	70 ft, 4 poles	44 × 20° 4 × 40°	Narrow beams cross the full 360 ft length from corner poles; one 40° per pole fills the near sideline.
Four tennis courts	39 ft, 4 poles	8 × 20° 4 × 50°	Two 20° groups reach the far and mid courts; one 50° floods the court at the base of each pole.
Six pickleball courts	39 ft, 4 poles	8 × 50°	A compact court block sits inside the wide beam; no narrow optic is needed at that throw distance.
Baseball diamond	Infield and outfield poles	11 × 20° 8 × 30° 5 × 40°	Three optics for two zones: narrow beams carry the outfield, 30° and 40° hold the infield level.
Skatepark	41.5–45.6 ft	4 × 40° 4 × 50°	Wide beams only. Bowls and transitions are vertical surfaces close to the pole, not a distant plane.

AIMING IS PART OF THE SPECIFICATION

An optic only performs at the tilt it was modeled at. Each study lists an aiming point or tilt angle per fixture, and that plan ships with the order so the installer can set each fixture to the modeled angle rather than eyeballing it.

On the football field, the 44 narrow-optic fixtures are aimed at tilts from 24.0° to 36.2° — the far corners of the field get the shallowest angles, the near sideline the steepest. On the tennis courts, the three aiming groups sit at −71.2°, −73.0°, and −53.6° from a 39 ft mounting height.

Mounting height carries more of the result than any other single variable. Where poles cannot go higher, a lighting engineer adds pole locations rather than pushing wattage — more light from a bad angle is still a bad angle.

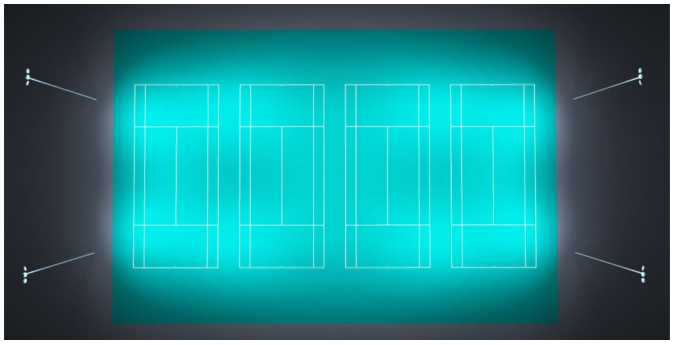

Four-court tennis design: two narrow-optic groups cross the site, one wide-optic group floods the near court.

Note on maintenance factor

The tennis, baseball, and skatepark studies apply a 0.90 maintenance factor — light levels are calculated after expected depreciation and dirt accumulation, not at day one. The football and pickleball studies report initial flux (MF 1.0).

Five Venues, Five Photometric Studies, One Fixture Family

Every figure on the next four pages comes from an Access Fixtures photometric study of a real venue, computed to methods recommended by the Illuminating Engineering Society of North America. Nothing here is a catalog estimate.

VENUE	FIXTURES	POLES	AVG fc	MAX/MIN	LOAD	PAGE
Football field, 360 × 160 ft	48 × STAD 850	4 at 70 ft	50	1.8	40,192 W	13
Four tennis courts	12 × STAD 570	4 at 39 ft	35–38	1.57–1.84	6,765 W	14
Six pickleball courts	8 × STAD 850	4 at 39 ft	46–48	1.48–2.04	6,706 W	14
Baseball diamond	24 × STAD 570	Infield + outfield	32.8 / 24.0	1.68 / 2.48	13,531 W	15
Skatepark redevelopment	8 × STAD 570	41.5–45.6 ft	8.7–24.5	1.08–2.30	4,512 W	15

100
STAD FIXTURES ACROSS THE FIVE DESIGNS

8.7–50 fc
RANGE OF LEVELS DELIVERED

20°–50°
EVERY OPTIC IN THE LINE USED

HOW TO READ THESE PAGES

Avg (Ē) is the average maintained illuminance across the calculation surface. **Max/min** is the uniformity ratio — lower is more even, and it matters more to players than the average does. **Load** is the connected fixture wattage from the study's luminaire list.

WHAT CHANGES BETWEEN VENUES

Not the fixture — the geometry. Pole height, setback, and the area of play decide the model, the optic mix, and the count. Two designs here run on nearly the same connected load and arrive at completely different arrays.

50 Footcandles Across 360 × 160 Feet, From Four Poles

Forty-eight STAD 850 fixtures on four 70 ft poles, calculated over a full NCAA football field on a 128 × 128 point grid. This is the design that shows what the 850's output buys: a complete field from the four pole locations a venue usually already has.

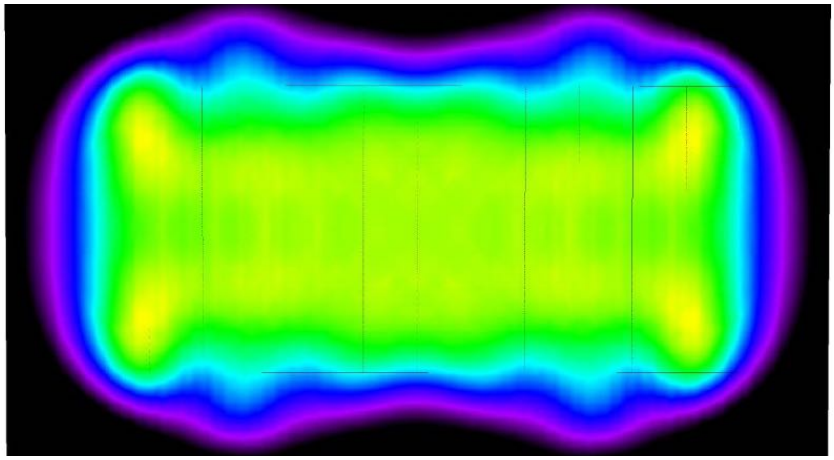

False-color perpendicular illuminance. Yellow-green is the playing surface at 45–56 fc; the purple fringe is the calculated spill beyond the field.

50 fc
AVERAGE, FULL FIELD

0.615
OVERALL UNIFORMITY (U0)

40,192 W
CONNECTED LOAD, 48 FIXTURES

CALCULATION SURFACE	AVG (Ē)	MIN	MAX	U0	MIN/MAX
Football field — perpendicular illuminance, 128 × 128 grid	50 fc	31 fc	56 fc	0.615	0.543
Luminaire schedule	44 × STAD 850 at 20° (138,513 lm ea.) · 4 × STAD 850 at 40° (142,306 lm ea.) · 12 fixtures per pole				

THE UPGRADE ARITHMETIC

Forty-eight positions carrying 1500W metal halide lamps draw 72,000 W of lamp load before ballast losses. The same 48 positions carrying STAD 850s draw 40,192 W — 44% less, at 50 fc average, with dimming still in hand.

Aiming: the 20° fixtures are set at tilts from 24.0° to 36.2°, the four 40° fixtures at 44.4°.

Request a photometric study for your field.

Send the field dimensions, the pole locations and heights you have, and the level of play. A lighting engineer models the venue and a specialist walks you through the result. Call 800-468-9925.

Source: Access Fixtures photometric study "360' × 160' Football Field," 13 pp., Exterior Scene 1. Values reported at initial flux (MF 1.0). Calculations follow methods recommended by the Illuminating Engineering Society of North America and are based on manufacturer photometric data; actual field performance varies with voltage, dirt accumulation, and site conditions.

Two Court Blocks, Two Fixture Tiers, Both From 39 ft Poles

The same pole height and the same four-corner strategy, solved twice: four tennis courts on the 570 at 35–38 fc, and six pickleball courts on the 850 at 46–48 fc. The fixture tier is what changes when the level target and the court count go up.

Four tennis courts

12 × STAD 570 · 4 POLES AT 39 FT · MF 0.90

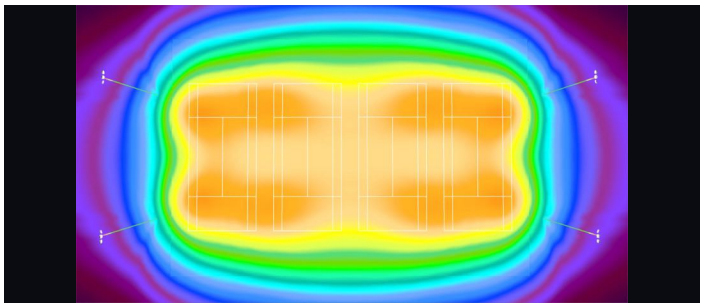

SURFACE	Ē	MIN	MAX	MAX/MIN
Court 1	38.0	24.6	45.2	1.84
Court 2	35.0	27.4	43.0	1.57
Court 3	35.0	27.4	43.0	1.57
Court 4	38.0	24.6	45.2	1.84

8 × 20° and 4 × 50° optics · 1,022,532 lm total · 6,765 W connected · 151.1 lm/W system efficacy

Six pickleball courts

8 × STAD 850 · 4 POLES AT 39 FT · MF 1.0

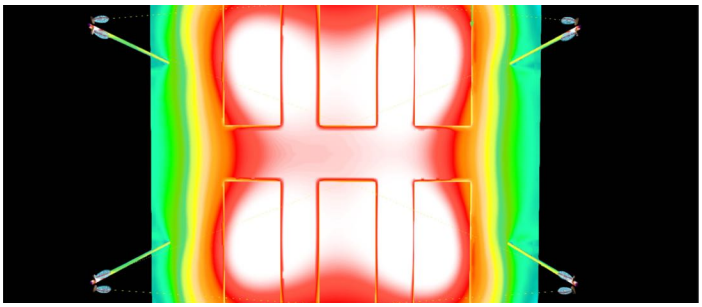

SURFACE	Ē	MIN	MAX	U0
Courts 1 & 4	47.6	29.4	60.3	0.62
Courts 2 & 5	46.2	35.1	52.0	0.76
Courts 3 & 6	47.8	32.6	56.8	0.68
Surround area	30.8	3.33	60.2	0.11

8 × 50° optics · 1,158,256 lm total · 6,706 W connected · 172.7 lm/W system efficacy

WHAT THE COMPARISON SHOWS

Both designs run about 6,700 W. The tennis courts spend it on twelve 570s with mixed optics to reach four separated courts; the pickleball courts spend it on eight 850s with one wide optic because the whole block sits inside the beam. Same budget, different geometry, different answer — which is exactly what a study is for.

The pickleball study also reports obtrusive light: 92.9% of the total flux lands downward on the site (RDLO), with 6.8% upward (RULO).

Sources: Access Fixtures photometric studies "Nahant Tennis," 21 pp. (12 STADs, 4 poles at 39 ft, MF 0.90) and "City of Hudson — Six Pickleball Courts," 39 pp. (8 STAD 850s, 4 poles at 39 ft, initial flux). Pickleball figures are reported at MF 1.0 and will be lower once depreciation is applied; the tennis figures already include a 0.90 maintenance factor.

When the Playing Surface Is Not a Flat Rectangle

A diamond has two zones at two levels. A skatepark has bowls, transitions, and coping — vertical surfaces at ten different heights. Both are STAD 570 designs, and both show why the calculation surfaces matter as much as the fixture count.

Baseball diamond

24 × STAD 570 · MIXED OPTICS · MF 0.90

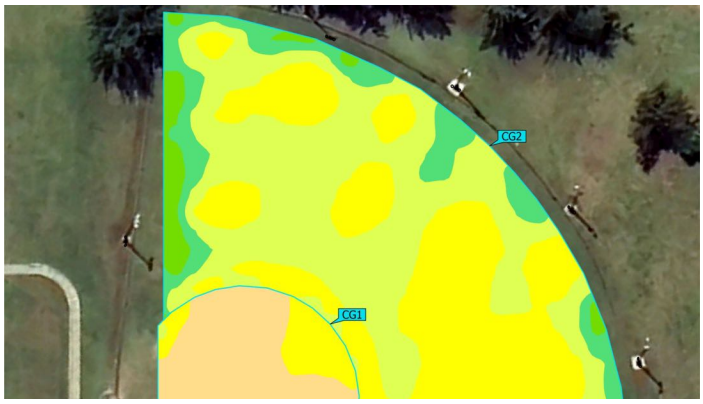

Calculated illuminance overlaid on the site: CG1 infield, CG2 outfield.

ZONE	Ē	MIN	MAX	MAX/MIN
Infield	32.8	23.0	38.7	1.68
Outfield	24.0	12.9	32.1	2.48

11 × 20°, 8 × 30°, 5 × 40° · 2,058,633 lm total · 13,531 W connected · 152.1 lm/W. The infield carries a higher level than the outfield by design — that step is what the mixed optic array delivers.

Skatepark redevelopment

8 × STAD 570 · 40° AND 50° · MF 0.90

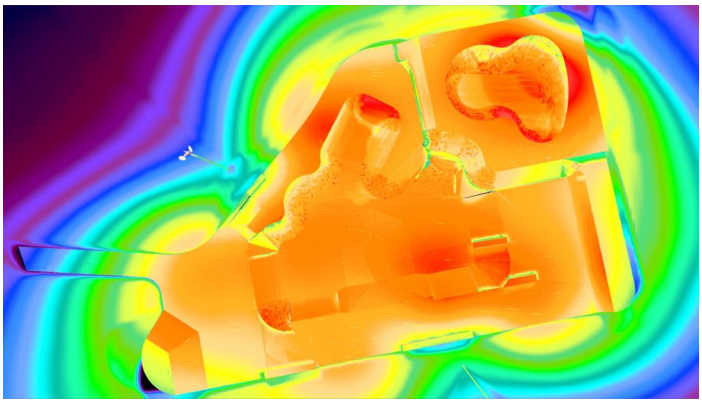

False-color plot across the bowls; ten surfaces were calculated at heights from 3.6 to 10.6 ft.

SURFACE	HEIGHT	Ē	MIN	MAX/MIN
Surface 1	3.6 ft	24.5	19.4	1.48
Surface 3	5.6 ft	24.4	23.4	1.08
Surface 6	8.9 ft	21.4	12.3	2.30
Surface 10	10.4 ft	8.69	6.16	1.78

4 × 40°, 4 × 50° · 698,056 lm total · 4,512 W connected · 154.7 lm/W. Mounting heights vary from 41.5 to 45.6 ft to clear the bowls; glare was calculated to CIE 112 at each riding position.

Sources: Access Fixtures photometric studies "Baseball Guam Project," 14 pp. (24 STADs, mixed optics, MF 0.90) and "Sooke Skatepark Redevelopment," 37 pp. (8 STADs, MF 0.90, glare to CIE 112). Selected surfaces shown; the full studies report every calculation surface.

Twelve STAD 850s on the Poles That Were Already There

The club needed to retire its legacy 1000W metal halide fixtures. The old wide beams scattered light everywhere and failed to track targets, and quotes for new metal poles ran $7,000 to $9,000 each.

12
STAD 850 FIXTURES

4 per pole
MOUNTED AT 20 FT ON EXISTING WOOD POLES

~$15,000
POLE UPCHARGE AVOIDED

Access Fixtures engineered a photometric design and adapted the mounting to the club's existing wood poles, avoiding roughly a $15,000 upcharge while holding structural integrity. The club selected twelve STAD 850 fixtures at 5000K, four per pole, mounted 20 feet up.

Under the daylight-quality light, members began seeing "dusters" — clays clipped by a pellet or two — that were invisible under the old fixtures.

> *"We never knew this concept existed until we got new lights. We see them clear as can be. We joke that we bought the lights to help everyone's score go up."*
>
> **Carl Kriger**
> Massachusetts Rifle Association

What transfers to any sport: the mounting was adapted to the structures the venue already owned, and the fixture count came out of a photometric model rather than a catalog assumption. That is the same process behind every design in this guide.

Configured to the Venue, Verified Before Release

The same five steps run whether the project is a new complex or a metal halide upgrade. Nothing is ordered before the design is proven.

1 · Scope the venue	Sport, level of play, surface dimensions, existing pole locations and heights, electrical service. On an upgrade, the fixture being replaced and its wattage.
2 · Set the target	The target level and uniformity come from the governing standard for that sport and level of play. The citation appears in your study.
3 · Model the design	A lighting engineer builds a digital model and calculates fixture count, optic per position, aiming angle, and the light that lands off the surface of play.
4 · Review and adjust	Pole heights, setbacks, and fixture counts get traded against budget until the design and the money agree.
5 · Release and install	The build is verified against the design, then released. The aiming plan ships with the fixtures so each tilt is set to the modeled angle.

MODEL	VOLTAGE	MOUNTING	OPTIC	CCT	FINISH
STAD 570	200–528 VAC (570, 850)	U-Bracket	20°	5000K	Gray
STAD 650	120–277 VAC (650)	Bolt Mount	30°		
STAD 850	277–480 VAC (650)		40°		
			50°		

SKU logic: AF55XL + body code + N30 + (nominal watts ÷ 10) + 5KUVG. Body codes are 2818 (570), 2808 (650), and 2822 (850).
Example: STAD 850 · 200–528 VAC · U-Bracket · 30° · 5000K · Gray → AF55XL2822N30855KUVG
Lead time: 7 to 10 day production plus shipping. Specify one selection from each column for each pole position; a lighting specialist verifies model, mount, optic, and voltage against the photometric design before the order is released.

Start With the Study. Buy Only the Fixtures the Venue Needs.

Whether you are breaking ground on a new complex or replacing metal halide fixture for fixture, a lighting specialist matches the STAD model, optic, and mount to your sport and your site.

Upgrading from metal halide

One-to-one replacement. 563.9 W or 651.8 W replaces a 1000W metal halide fixture; 837.5 W replaces a 1500W — around 44% fewer fixture watts before ballast losses, and further with dimming.

Match and exceed the old level. The photometric model proves the new level against the existing one before anything ships.

End the maintenance cycle. L70 at 50,000 hours retires the lamp, the ballast, and the lift rental.

Building something new

Place the poles from the model. The design dictates pole locations and heights from day one, before concrete.

Size the infrastructure once. Fixtures, brackets, and poles are engineered together to carry a high-output array.

Hold the level for every sport. One array, dimmed and aimed for each geometry the venue schedules.

143,627 lm	171 lm/W	50,000 hrs	5 years
MAX DELIVERED OUTPUT	UP TO, EFFICACY	L70 RATED LIFE	LIMITED WARRANTY

Request a photometric study for your venue.

Before you buy a single fixture, Access Fixtures lighting engineers prove the design on a digital model of your court, field, diamond, or park. Send the dimensions and the pole locations you have; a lighting specialist walks you through the result and the options.

800-468-9925 **Sales@AccessFixtures.com** **AccessFixtures.com**